Light duty with pivoting hook - forend 22 mm

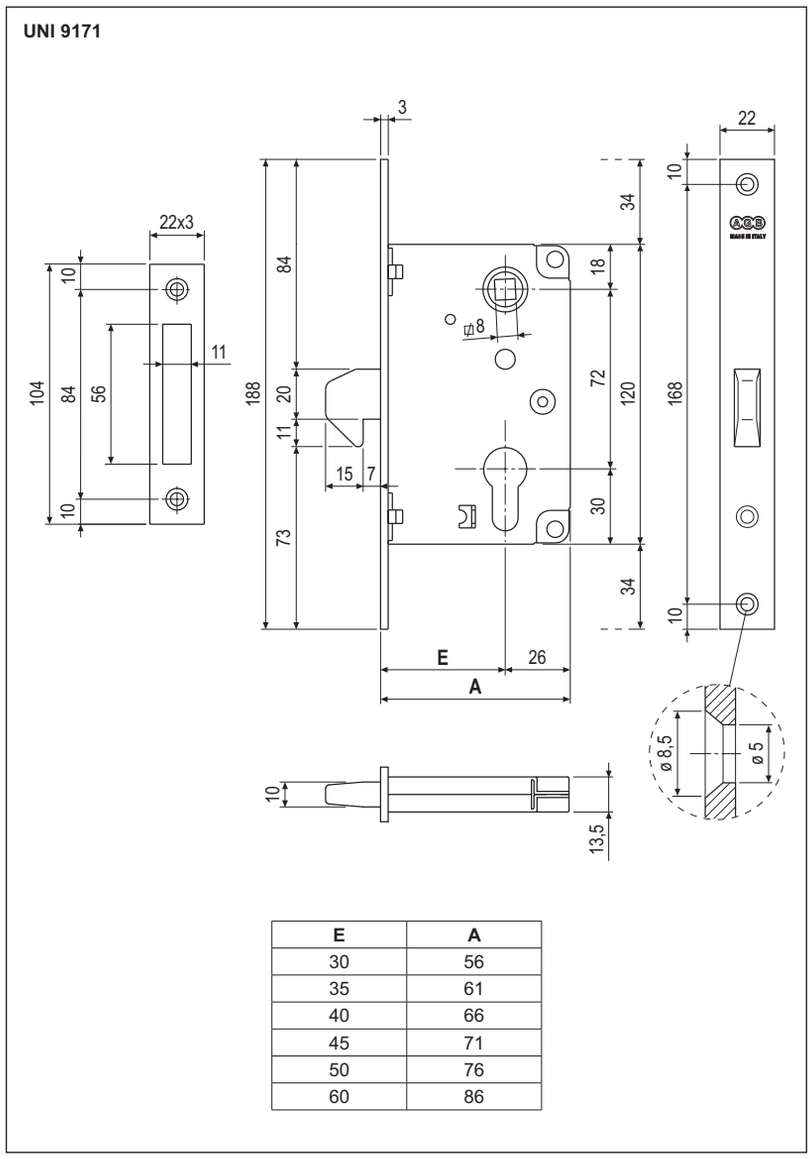

E	A
30	56
35	61
40	66
45	71
50	76
60	86

Description

Embedded lock with fixed claw hook and striker, to be used in combination with a DIN V 18254 European profile cylinder. The hook, made of forged brass, is actuated by the cylinder and the handle. The case and internal components are made of tropicalised steel. 25 mm forend with square ends. Six 30 to 60 mm backsets.

Application

Lock for light-duty exterior sliding doors and gates made of metal section, wood or other materials.

Mounting

Prepare recess in the section according to the dimensions shown in the diagram. Fasten the forend and striker using suitably threaded 4x25 mm screws, or M5 threaded screws.,5

NB. *Each box contains a lock, striker and cylinder fastening screw. The cylinder must be ordered separately.*

Order Specifications

Material	SALES CODE			
	Ref.	Backset	Finish code	
STEEL	B00910	30-35-40-45-50-60	XX	

NB. *Refer to the price list in force to check the availability of the finishes.*